Soccer Goal

Model: SG22 & SG24 Series

Installation, Operation and Maintenance Instructions

Please read all instructions before attempting installation or operation of these units

---

SAVE THESE INSTRUCTIONS FOR FUTURE USE

PUBLICATION NO.
6 5 1 7 5 3 9 4 2

Revised
April 23, 2010

Table of Contents

Section	Page No.
Introduction/Liability Disclaimer	2
Parts Checklist	3
Goal Assembly	4-8
Instructions for Permanent & Semi Permanent	9
Maintenance	10

Introduction/Liability Disclaimers

Thank you for your purchase of the SG22 or SG24 Series Soccer Goal. To ensure that our equipment will provide years of use to you, we are including this installation, operation, and maintenance guide. This guide will provide information on the proper assembly and installation methods, operating procedures, and preventative maintenance of your soccer goal.

Please note that a Bill of Materials is being included with this guide. Please check that all of the parts called out on the Bill of Materials are present prior to beginning assembly. Please do not substitute for factory parts. Please contact the PSS or Gared Sports customer service department and allow them to determine if substitute parts are acceptable.

It is recommended that an individual who has been properly trained perform assembly and set up of the Soccer Goal. No one under the age of 18 should attempt assembly or set up of the unit, unless properly supervised.

To prevent normal wear and tear from shortening the life of the unit, preventative maintenance inspections and repairs should be performed at least once per year. If the units are subject to high or unusual usage, inspections should be scheduled to occur more frequently. If items are found to be nonconforming, replacements can be ordered from Gared Sports or one of our authorized dealers. When contacting PSS or Gared Sports, please have information regarding the dealer/installer who sold the unit, the name of the project, and any applicable warranty information.

⚠ WARNING

Portable or Moveable Soccer Goals can fall over causing serious injury or death. Anchors must be properly installed and used on all portable or moveable soccer goals at ALL times.

126255020

Before proceeding with assembly, read all instructions and assembly proceedures. Make sure all parts have been received and are not damaged.

Parts Checklist

Verify all parts listed on packing list are present prior to installation.

Soccer goal frame components

Check the chart for the proper parts that match the Goal P/N received.

		Goal Size	8’ x 24’	7’ x 21’	6.5’ x 18’
Item	**Description**	**Qty**	**SG22824**	**SG22721**	**SG22618**
			SG24824	**SG24721**	**SG24618**
1	Net	1	Net Chart	Net Chart	Net Chart
2	Backstay	2	651652463	651652498	651652501
3	Backstay Brace Tube	1	651652575	651652576	651652577
4	Top Welded Rail	1	655755824	655755821	655755818
5	Side Rail	1	655755856	655755855	655755854
6	Connecting Tube	2	655755203		
7	Backstay Mtg. Bracket	4	651653682		
8	Brace Clamp (pair)	2	651653590		
9	Ground Anchor	4	651652570		
10	Net Clips	40	651652567		
11	Hex Bolt 3/8” x 2-1/2”	4	502-6-16-24		
12	Hex Bolt, 3/8” x 1.5”	8	561-6		
13	Hex Bolt, 3/8” x 3/4”	8	562-6		
14	Flat Washer, 3/8”	16	502-6-16-40		
15	Lock Washer, 3/8”	16	545-6-16		
16	Nylon Lock Nut, 3/8”	4	502-6-16-12Z		
17	Square Nut, 3/8”	8	545-5-18		
18	Car. Bolt, 5/16x 2-1/2”	2	546-6-16		
19	Flat Washer, 5/16’	2	561-5		
20	Lock Nut, 5/16”	2	501-5-18-40		
21	Ground Sleeve Asm.	2	656253884 (24 series only)		
22	Ground Sleeve Cap	2	656253895 (24 series only)		

Net chart

Check the net P/N to make sure it matches the net numbers shown for the goal you received.

Net	**SG22824**	**SG22721**	**SG22618**
	SG24824	**SG24721**	**SG24618**
4 mm Orange	SN824-4O		
4 mm White	SN824-4W		
3 mm Orange	SN824-3O	SN721-3O	SN618-3O
3 mm White	SN824-3W	SN721-3W	SN618-3W
2.5 mm Orange			SN618-2O
2.5 mm White			SN618-2W

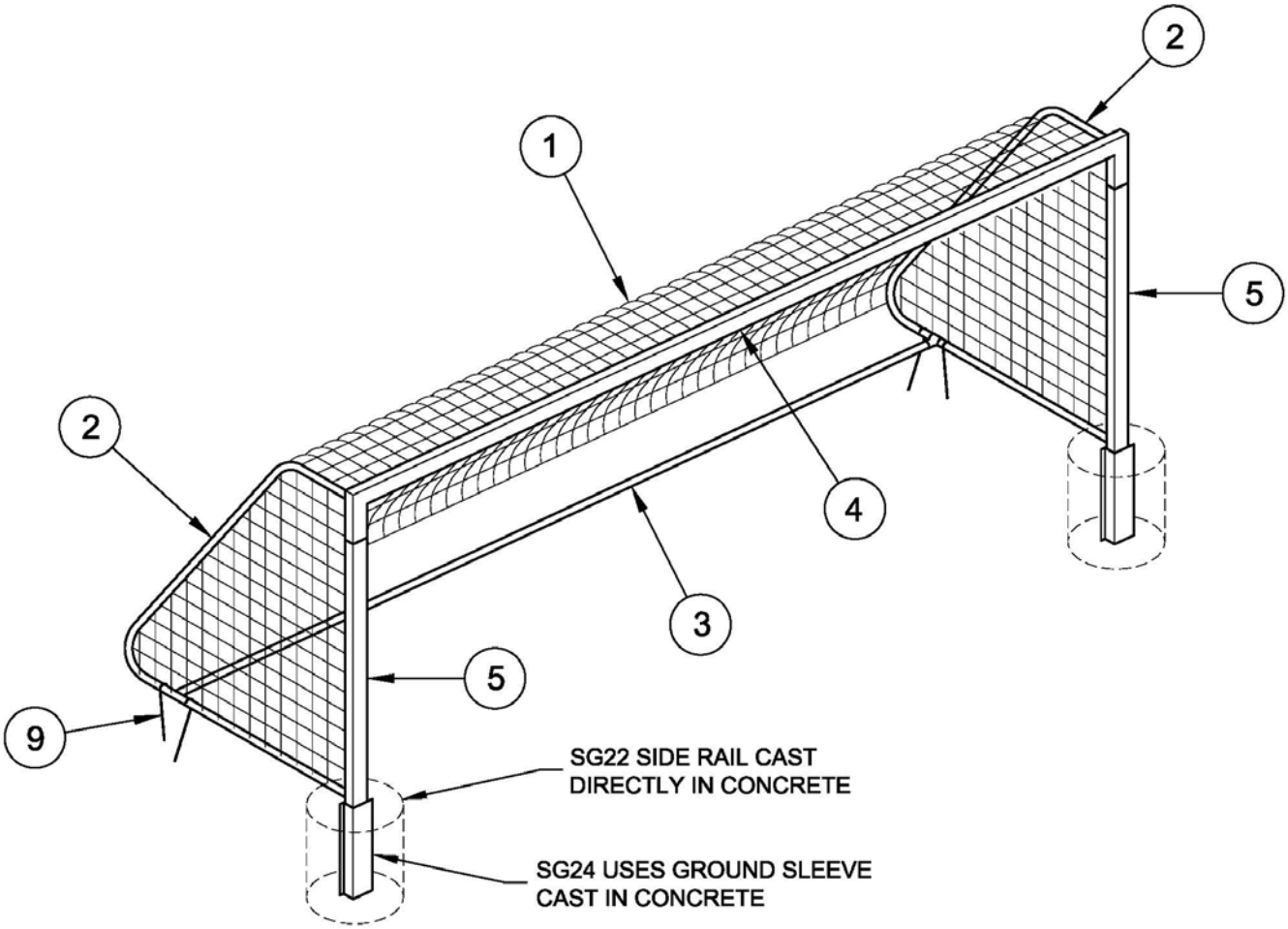

(Master Illustration)

Use the above illustration to identify the main parts of your SG22 or SG24 style soccer goal.

<u>*NOTE:</u>

Balloon numbers throughout this manual will match the ***<u>Item</u>*** numbers in the ***<u>Parts Checklist.</u>***

<u>Goal Frame Assembly</u>

*Use the step by step instructions on the following pages
to assemble your SG22 or SG24 series soccer goal.

1) Attach a Backstay Mounting Bracket (7) to each end of the Top Rail (4) as shown in the following illustration. Use 3/8” x 3/4” bolts (13), and 3/8” lock washers (15) to attach the bracket. The 3/8” square nuts (17) fit into the slot in the extrusion as shown. Slide the bracket up and hand tighten the nuts. Position is not important at this point. Go to step 2

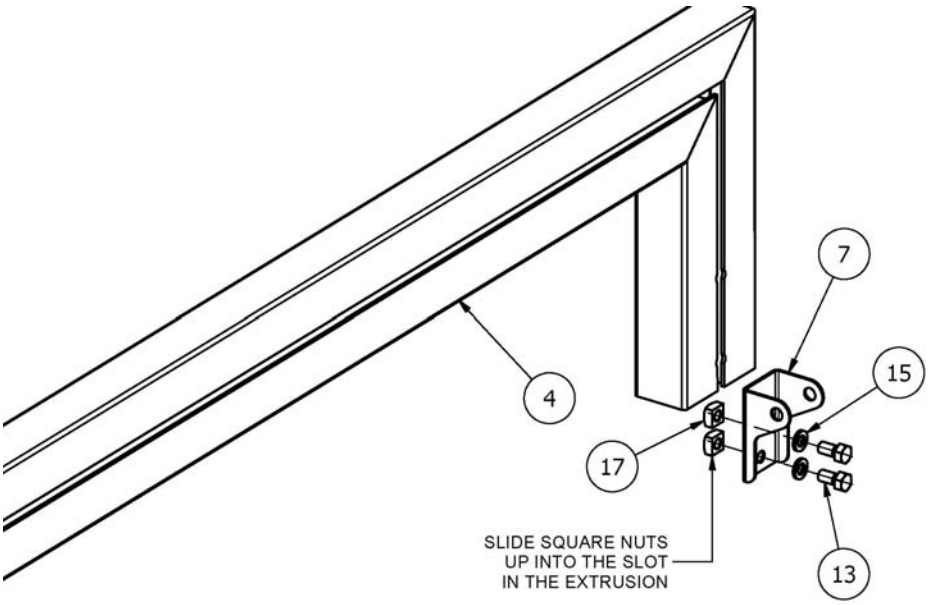

2) Next attach the Side Rails. Position the Connecting Tube (6) between the Top Rail and Side Rail. Align the four holes. Attach the Side Rail (5) with 3/8” x 1-1/2” bolts (12), 3/8” flat washers (14), and 3/8” lock washers (15). Use the illustration below as a guide. When everything is aligned, securely tighten the bolts.

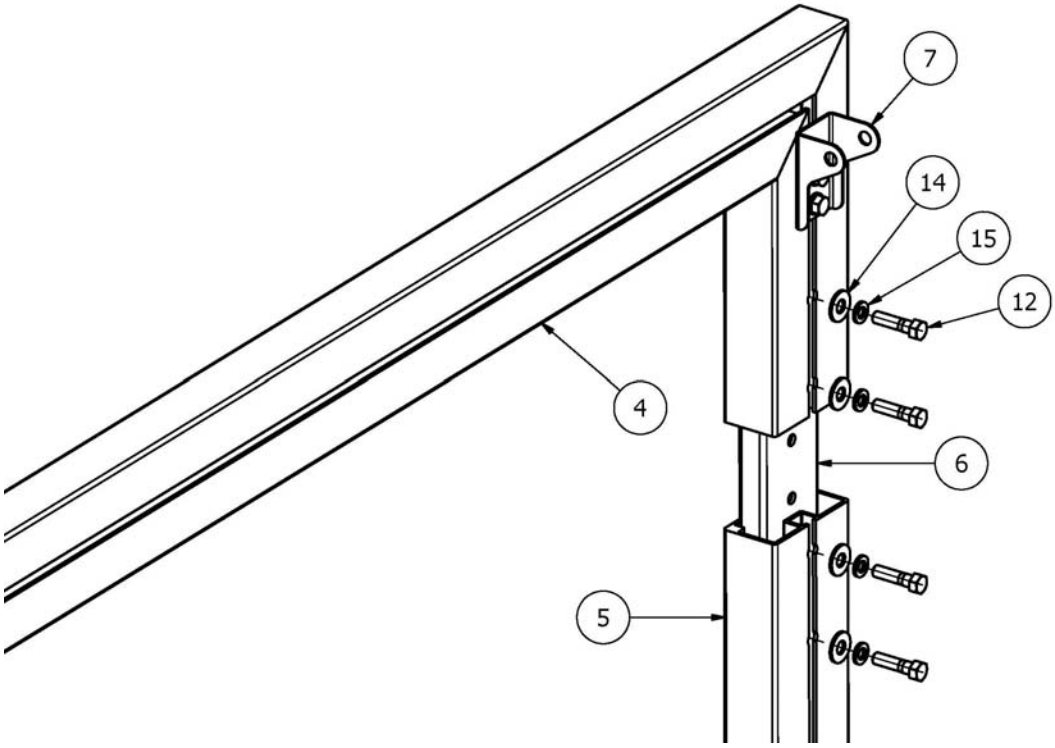

3) Now attach the lower Backstay Mounting Bracket (7) as shown in the illustration below. Use the same hardware as the top bracket. Mount the bottom end of the Backstay Pipe (2) to the bracket using two 3/8” flat washers (14), a 3/8” x 2-1/2” bolt (11), and a 3/8” nylon lock nut (16).

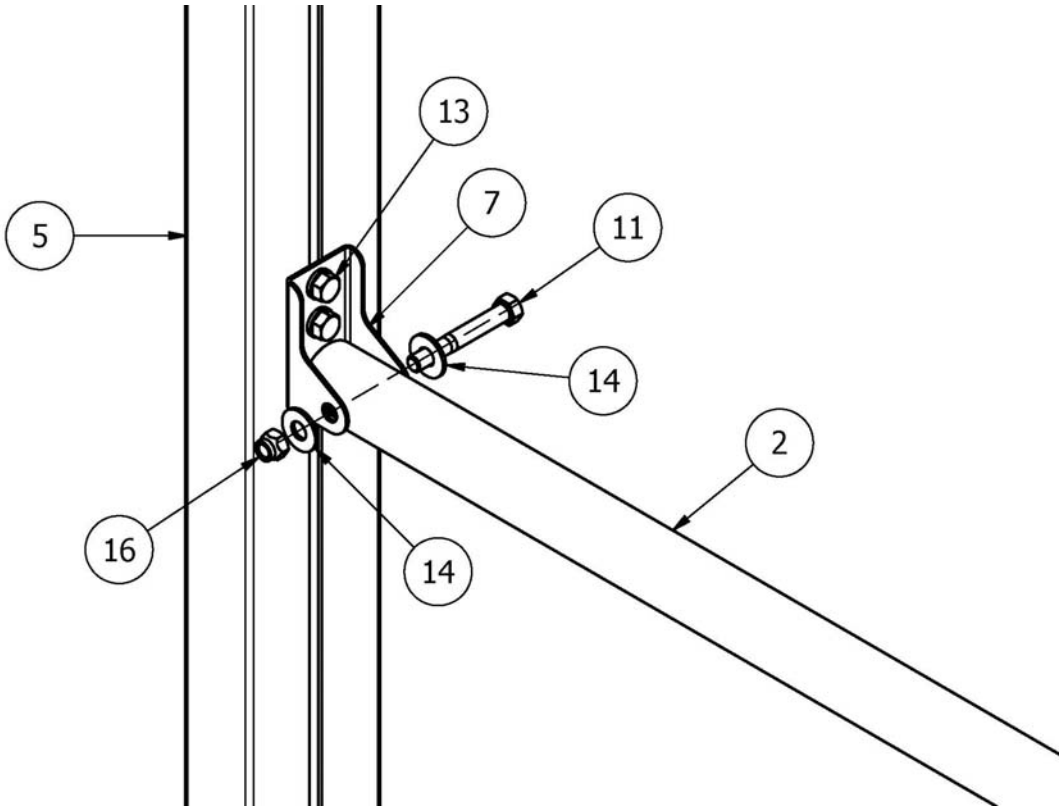

The bottom side of the backstay pipe should be 24” above the bottom of the Side Rail.

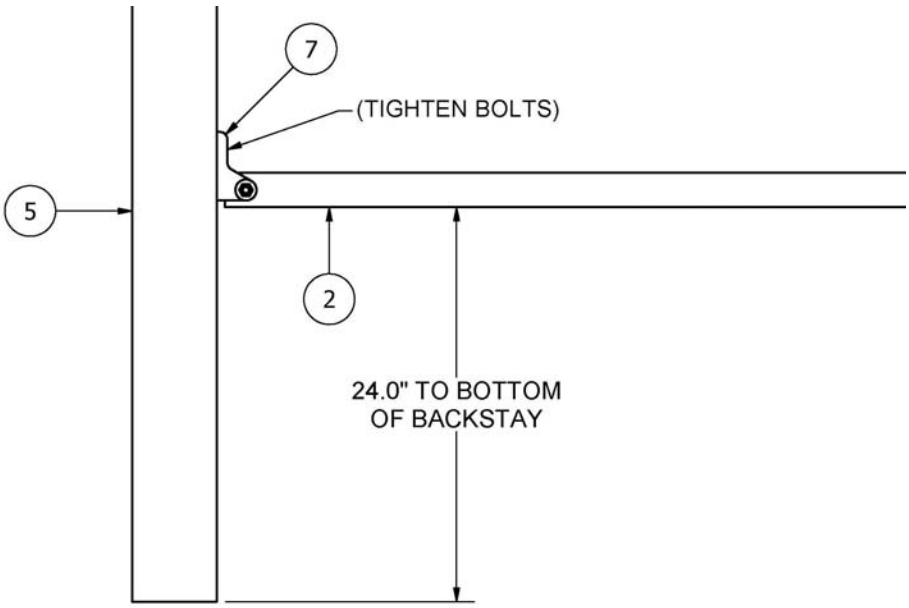

4) Attach the top end of the Backstay Pipe (2) to the top of the Backstay Mounting Bracket (7) as shown in the illustration below. The height of the backstay pipe will determine the final position of the top mounting bracket. When all parts are aligned, securely tighten the bracket bolts (13).

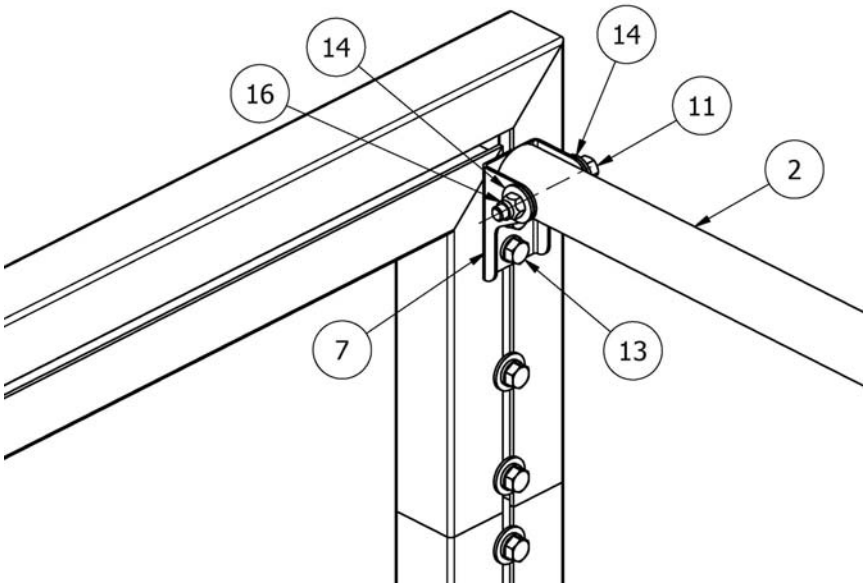

5) Attach the Backstay Brace Pipe (3) near the back of the two side backstay pipes. (see the following illustration). Use two Brace Clamp halves (8) to attach each end of the brace pipe. Insert a 5/16” x 2-1/2” carriage bolt (18) from the bottom as shown. Secure with a 5/16” flat washer (18) and a 5/16” nylon lock nut (20).

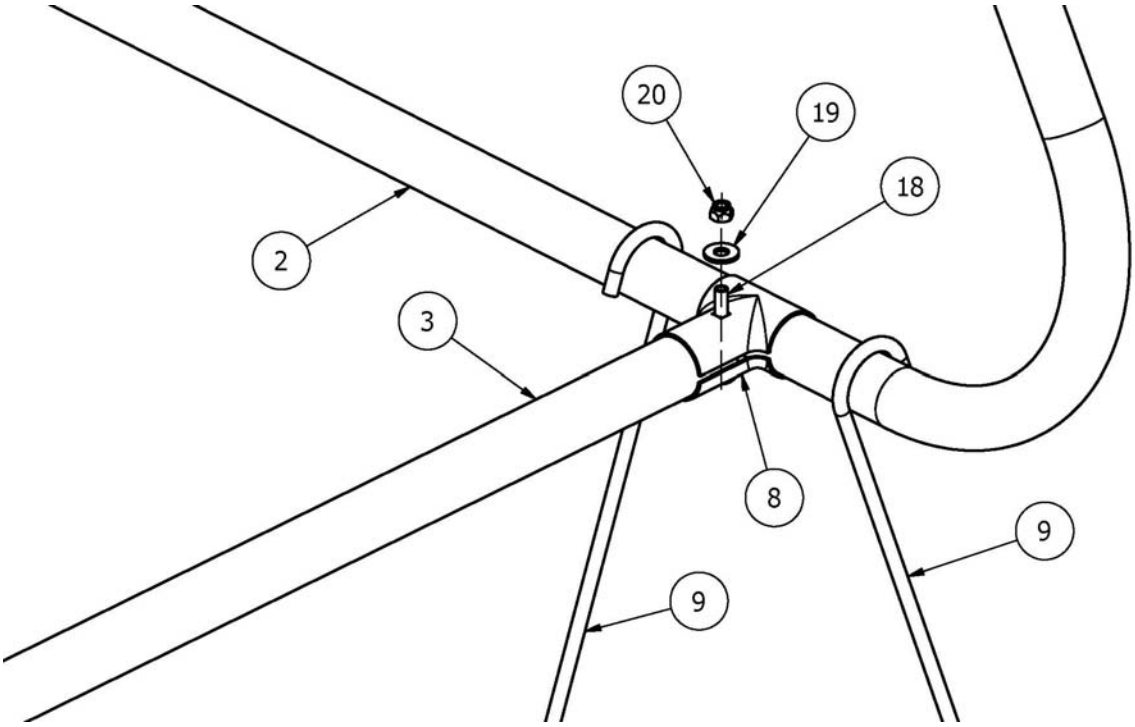

6) Attach net using Net Clips (item 10). Insert net rope into clip. Rotate clip 90 degrees and insert tang clips into the slot. When fully inserted, rotate clip back 90 degrees to lock in place.

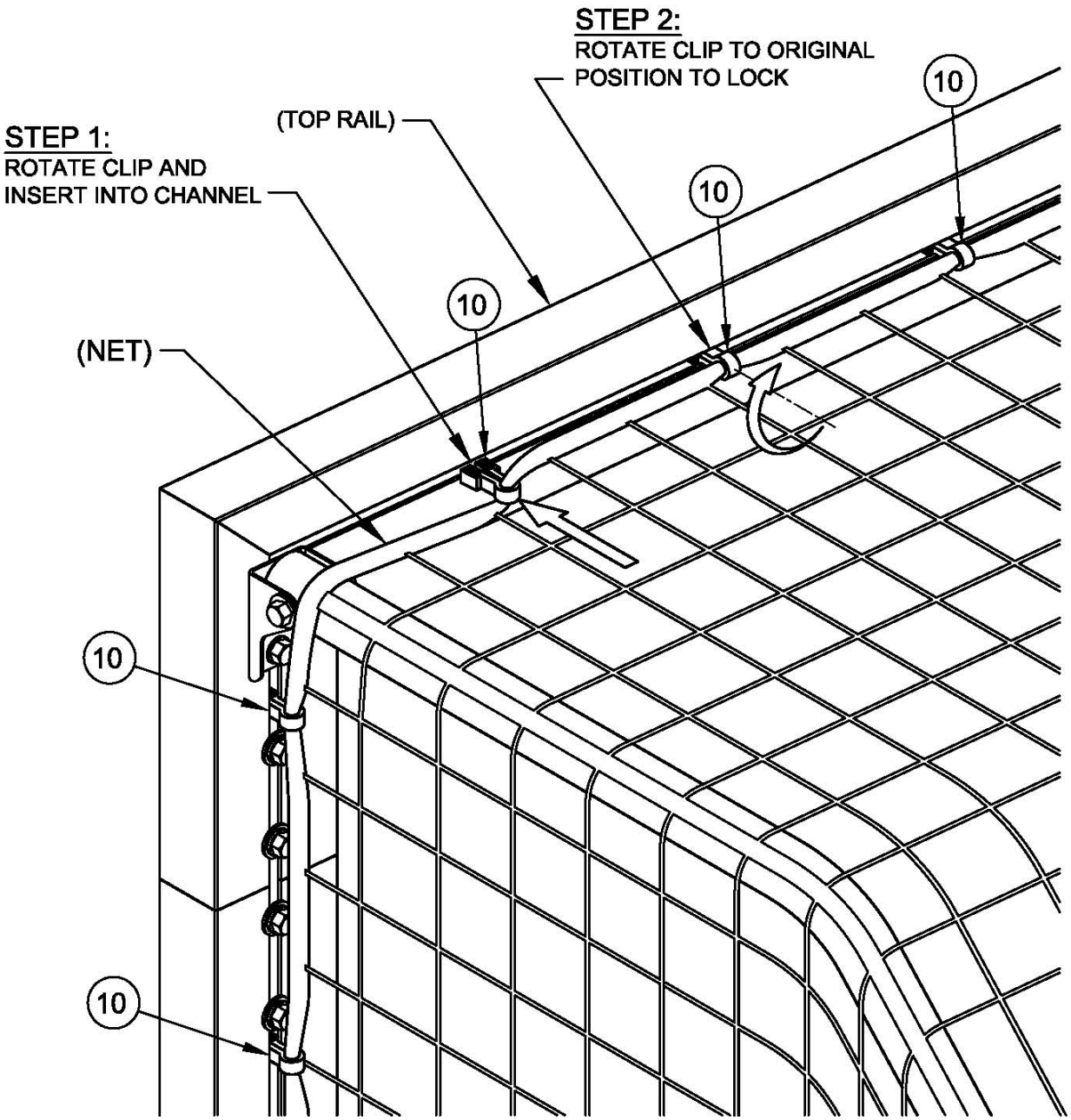

7) Inspect all joints and connections to make sure the goal is ready for play.

Instructions for installing the main posts for the SG22 permanent and SG24 semi-permanent Soccer Goals.

Shown below is the suggested method of installing the goal posts or ground sleeves for the 2” x 4” rectangular soccer goal tubing. This mounting system has a 6” gravel base to insure good drainage.

The whole base is slightly below ground level and can be capped with the sleeve cap as provided with each goal kit. The slope of the concrete on top allows better drainage without exposing the concrete to the surface of the playing field. All sleeve systems are very similar in construction and layout. The only difference is the physical size and series of the goal.

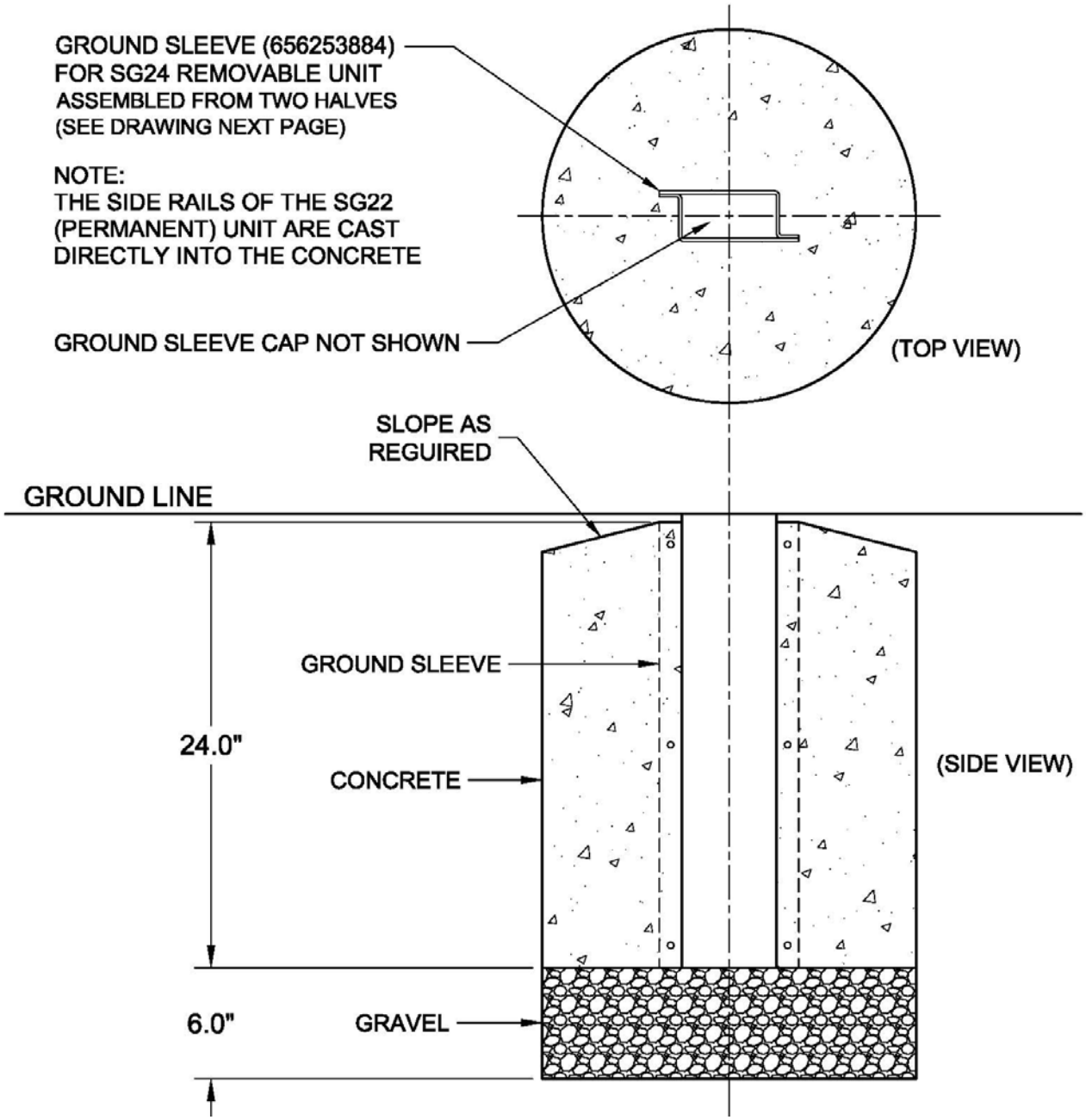

Maintenance

1) General inspection of equipment when used should be performed to ensure no catastrophic failures have occurred during the course of use between yearly inspections.
2) It is recommended that yearly inspections be conducted to determine if any bolts or other hardware has become worn or loosened.
3) During yearly inspections, check all joints to make sure they are tight and secure. Check the net for wear, holes, torn rope, etc.
4) Any loose bolts or nuts should be tightened.
5) Replace any components that are missing or worn.

Gared Holdings, LLC

Performance Sports Systems
9200 E. 146th Street
Noblesville, IN 46060

Gared Sports
707 North 2nd Street
St. Louis, MO 63102