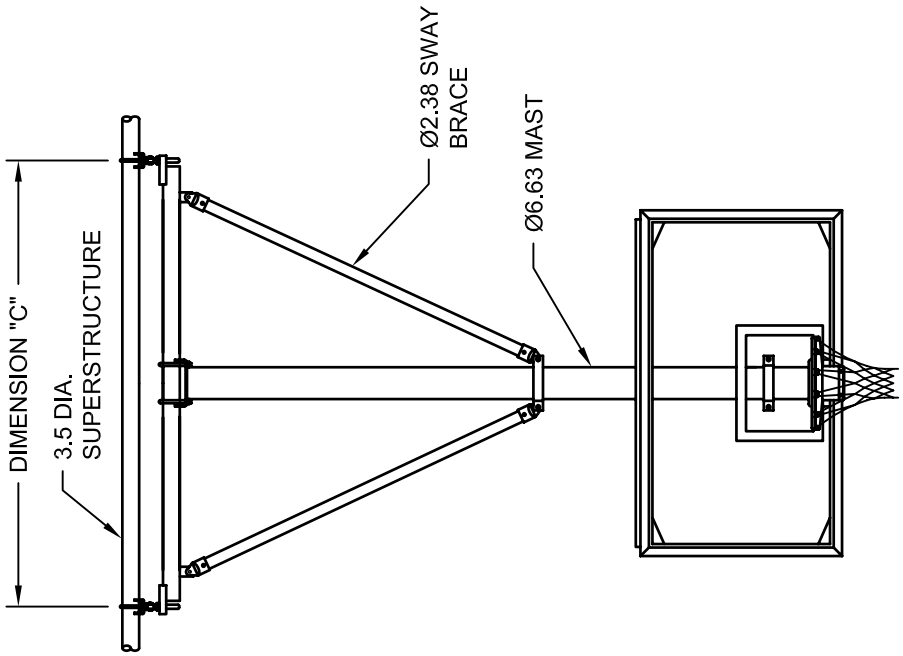

TRUSS HEIGHT FEET & (METERS)	DIM "C" Ft.-In. (Meters)
30' TO 31.9' (9.14-9.74M)	7'-9" (2.37M)
32' TO 33.9' (9.75-10.35M)	7'-9" (2.37M)
34' TO 35.9' (10.36-10.96M)	10'-9" (3.28M)
36' TO 37.9' (10.97-11.57M)	10'-9" (3.28M)
38' TO 40' (11.58-12.19M)	10'-9" (3.28M)

DIMENSIONS ABOVE ARE ± 1/2"

NOTE:
STANDARD ATTACHMENT HEIGHTS (TRUSS HEIGHT) FOR MODEL 3114 CLAMPED UNITS ARE 30 FT. MINIMUM AND 40 FT. MAXIMUM. CONTACT PERFORMANCE SPORTS SYSTEMS FOR INFORMATION IF TRUSS HEIGHTS ARE NOT WITHIN THIS RANGE.

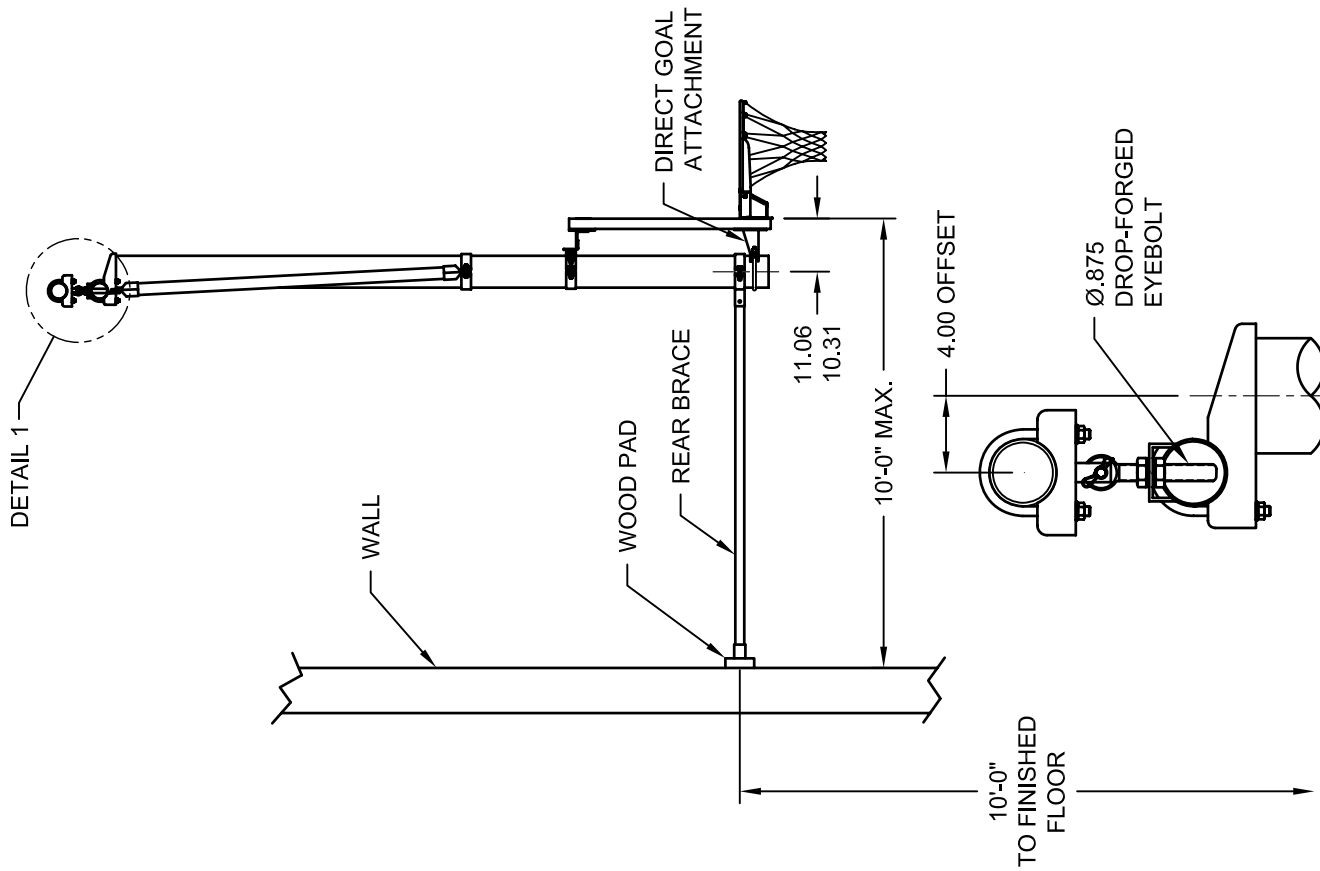

REVISION		
REV.	DATE	BY
A	12/08/03	JJC
B	12/20/06	WAE
C	05/16/08	RWP

PSS PERFORMANCE SPORTS SYSTEMS

GARED™

Gared Holdings, LLC
9200 E. 146th St. Noblesville, IN 46060

THIS DOCUMENT CONTAINS TRADE SECRET AND OTHER MATERIALS WHICH ARE PROTECTED BY CONFIDENTIALITY NOTICE AND AGREEMENT AND BY COPYRIGHT. ANY USE OR COPYING OF THIS DOCUMENT EXCEPT AS AUTHORIZED BY GARED HOLDINGS, LLC IS STRICTLY PROHIBITED.

WALL BRACED STATIONARY BACKSTOP

DRAWN CONNERLEY	DATE 04/30/03	MATERIAL N/A	
APPROVED JJC	DATE 04/30/03	FINISH N/A	
FILE LOC. Q:\Final Release\Specifications		DWG. NO. 3114	

SIZE	SCALE	SHT. NO.	PART NO.	REV
A	NONE	1 OF 1	3114	C

MODEL 3114

Clamped Single Post Wall Braced Stationary Basketball Backstop

Recommended Application

This model is designed for those areas not requiring the structure to fold into a storage position, and will allow a back brace to the wall. This single post unit can be used at heights from 30' to 40'.

Overhead Structure

Unit shall be supported from 3-1/2" O.D. x 0.120" wall ASTM A-500 Grade B horizontal and 2-3/8" O.D. x 12 gauge (0.109") wall ASTM A-513 vertical structural steel tubing secured to the building with heavy gauge steel stampings or weldments (as required by building conditions). When truss span widths exceed 10'-0", 3-1/2" O.D. x Schedule 40 (0.216") wall ASTM A-500 Grade B will be used for the horizontals. Spans over 14'-0" will use welded bridge pipe.

Backstop

The backstop shall be of a single post design with a main vertical mast made of 6-5/8" O.D. x 0.120" wall ASTM A-500 Grade B structural steel tubing with 2-3/8" O.D. x 12 gauge (0.109") wall ASTM A-513 steel tube sway braces clamped in place. Main mast will be suspended from superstructure with a welded steel plate offset hanger 4" in front of the pivot point, less than 4" will not be approved as equal. Backstop shall be manufactured to allow 6" vertical adjustment for plumbing of the backboard. All fittings shall be heavy gauge steel stampings or weldments. A direct goal attachment is used to transfer stress from the goal to the main mast assembly preventing strain on the backboard.

Wall brace shall be 1-7/8" O.D. x 12 gauge (0.109") wall ASTM A-513 steel tubing attached to the main mast 12" to 18" above bottom of mast pipe. Backstop manufactured in accordance with 1994 rule 1, section 8, stating that all parts of the backboard support system shall be at least 6" behind backboard.

All steel has a black powder coat finish, standard. Optional colors are available.

Accessories

Backboard and Goals - See the backboards and goals section in the specification manual.

Bank Padding - See the accessories section in the specification manual.

Certifications

Unit meets all requirements of the NCAA and NFHS. Unit complies with design standards of the California Department of State Architects. Unit is approved by FIBA for international Level 2 competition. Certificate of Approval available.

Subject to design change and current manufacturing practices.
Revised April 4, 2008 ©2008 Gared Holdings, LLC